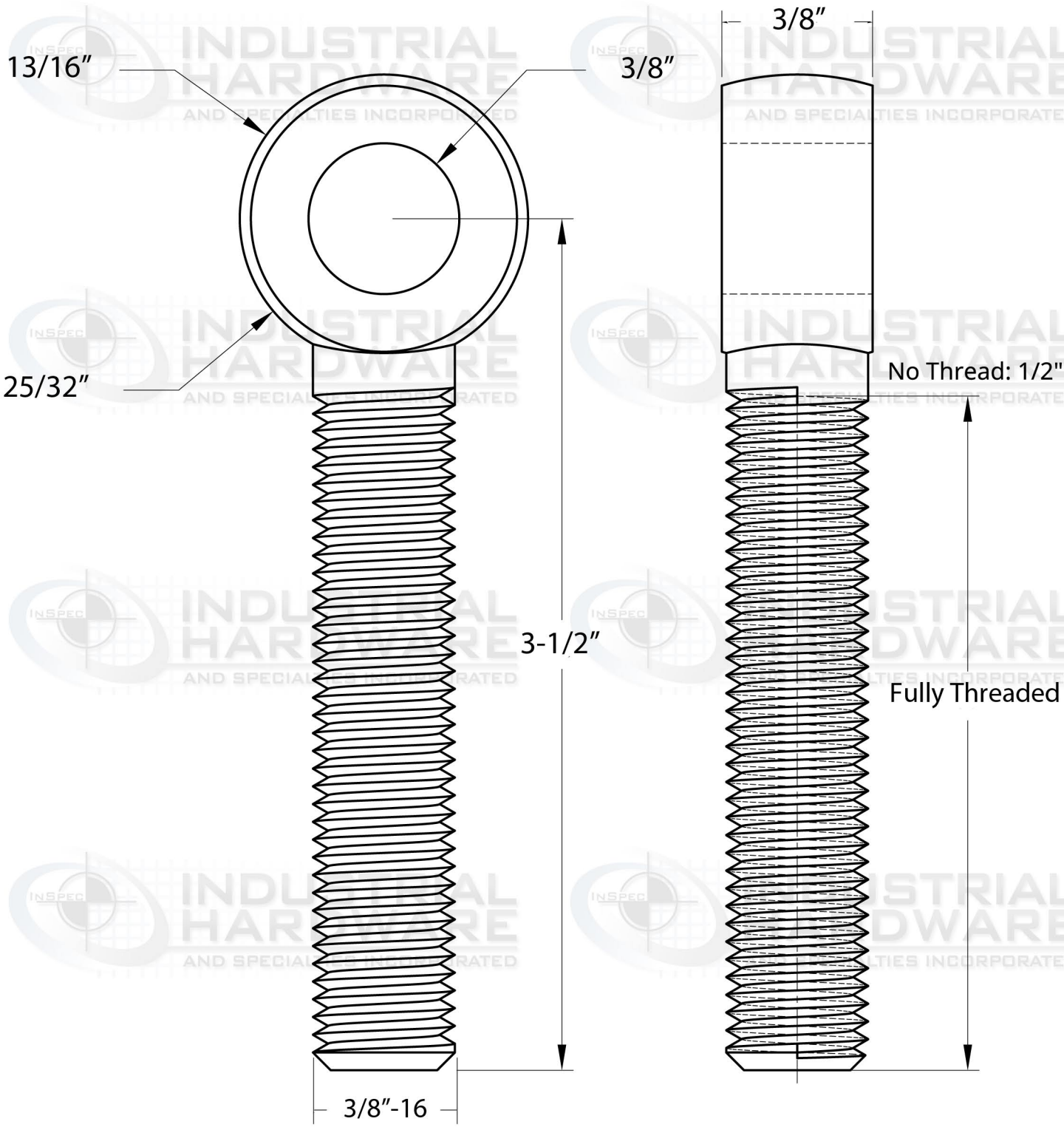

SCALE 1:1

SCALE 1:1

UNLESS OTHERWISE SPECIFIED, DIMENSIONS ARE IN INCHES .XX = ±.0- .XXX = ±.00- .XXXX = ±.000- ANGULAR = ± ° FRACTIONAL = ± SURFACE FINISH		NAME	DATE
	DRAWN	SANE FRIEND	07/22/2020
	CHECKED		
	APPROVED		
DO NOT SCALE DRAWING			
BREAK ALL SHARP EDGES AND REMOVE BURRS			
THIRD ANGLE PROJECTION	MATERIAL Alloy Steel 4140	FINISH Black Oxide	

INDUSTRIAL HARDWARE & SPECIALTIES, INC.
17-B KENTUCKY AVE PATERSON NJ 07503
973-684-4010 | INDUSTRIALHARDWARE.COM

TITLE

SIZE	DWG NO.	REV.
A	59A-3A-B7MACH	
SCALE 1:4	WEIGHT 0.12	SHEET 1 of 1