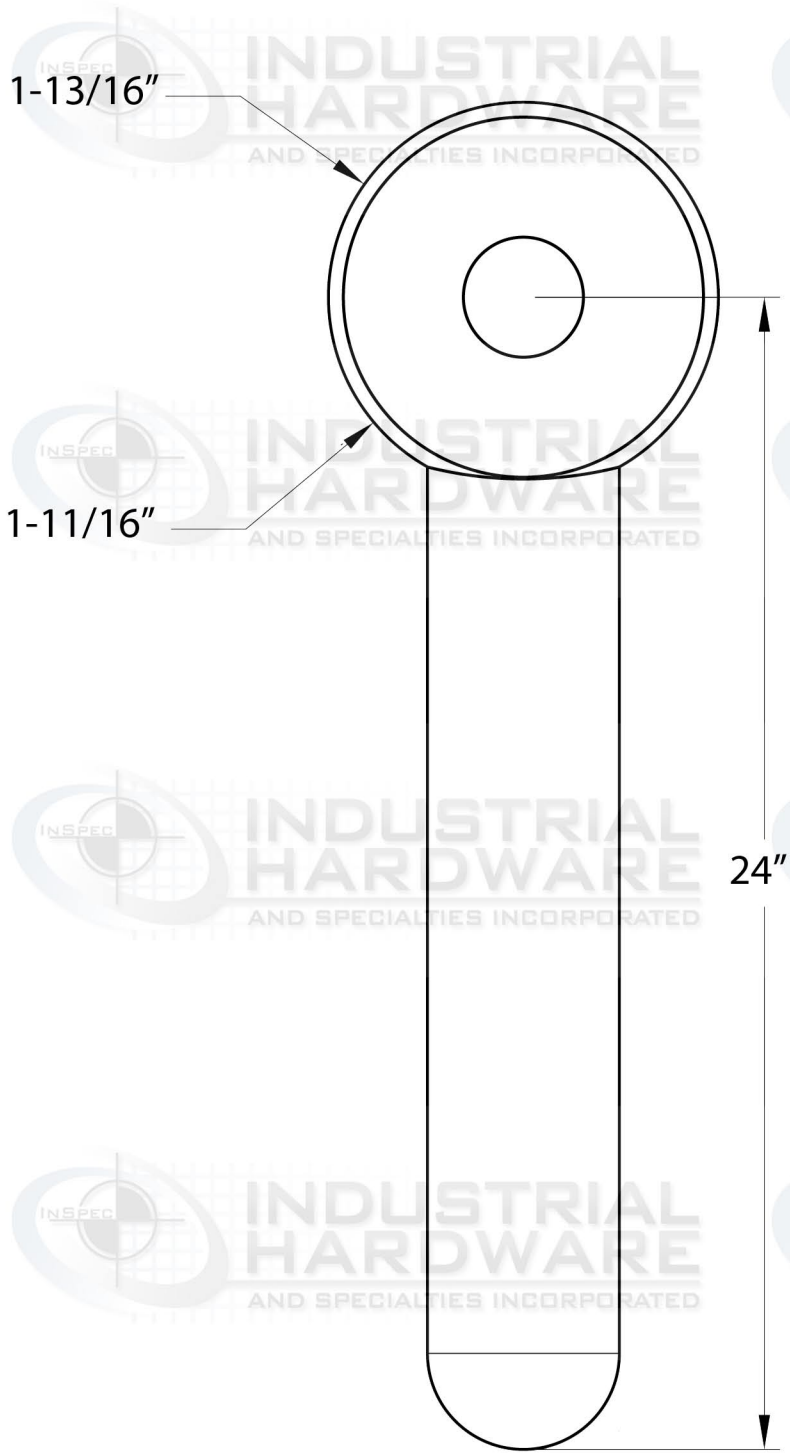

SCALE 1:1

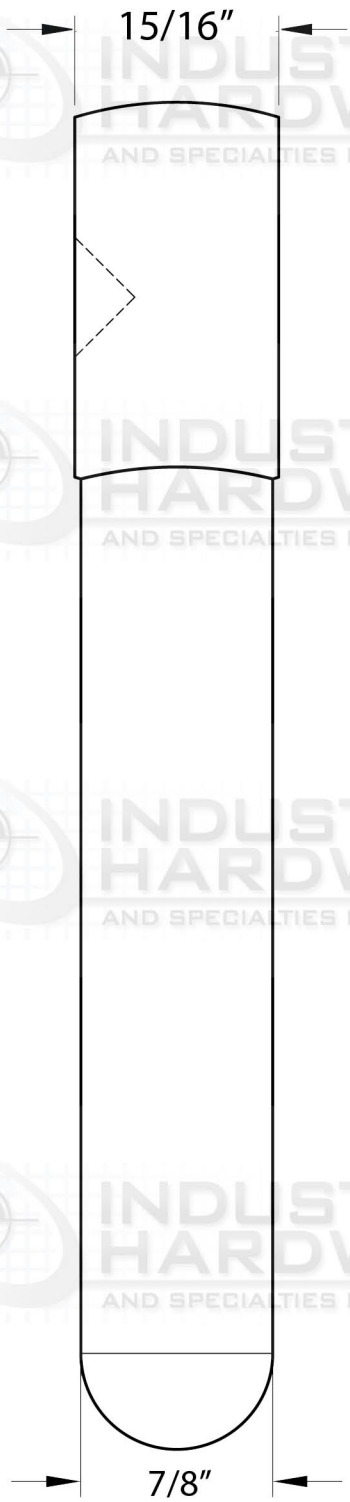

SCALE 1:1

UNLESS OTHERWISE SPECIFIED, DIMENSIONS ARE IN INCHES .XX = ±.0- .XXX = ±.00- .XXXX = ±.000- ANGULAR = ± ° FRACTIONAL = ± SURFACE FINISH		NAME	DATE
	DRAWN	SANE FRIEND	07/22/2020
	CHECKED		
	APPROVED		
DO NOT SCALE DRAWING			
BREAK ALL SHARP EDGES AND REMOVE BURRS			
THIRD ANGLE PROJECTION	MATERIAL Carbon Steel C1030/1035	FINISH Self-Colored	

INDUSTRIAL HARDWARE & SPECIALTIES, INC.
17-B KENTUCKY AVE PATERSON NJ 07503
973-684-4010 | INDUSTRIALHARDWARE.COM

TITLE

SIZE A	DWG NO. 59A-8J24		REV.
SCALE 1:4	WEIGHT 2.6	SHEET 1 of 1	

INDUSTRIAL HARDWARE AND SPECIALTIES INCORPORATED