# WireSert Locking

| ZONE | REV. | REVISIONS DESCRIPTION | DATE | APPROVED |
|---|---|---|---|---|
| | | | | |
| | | | | |

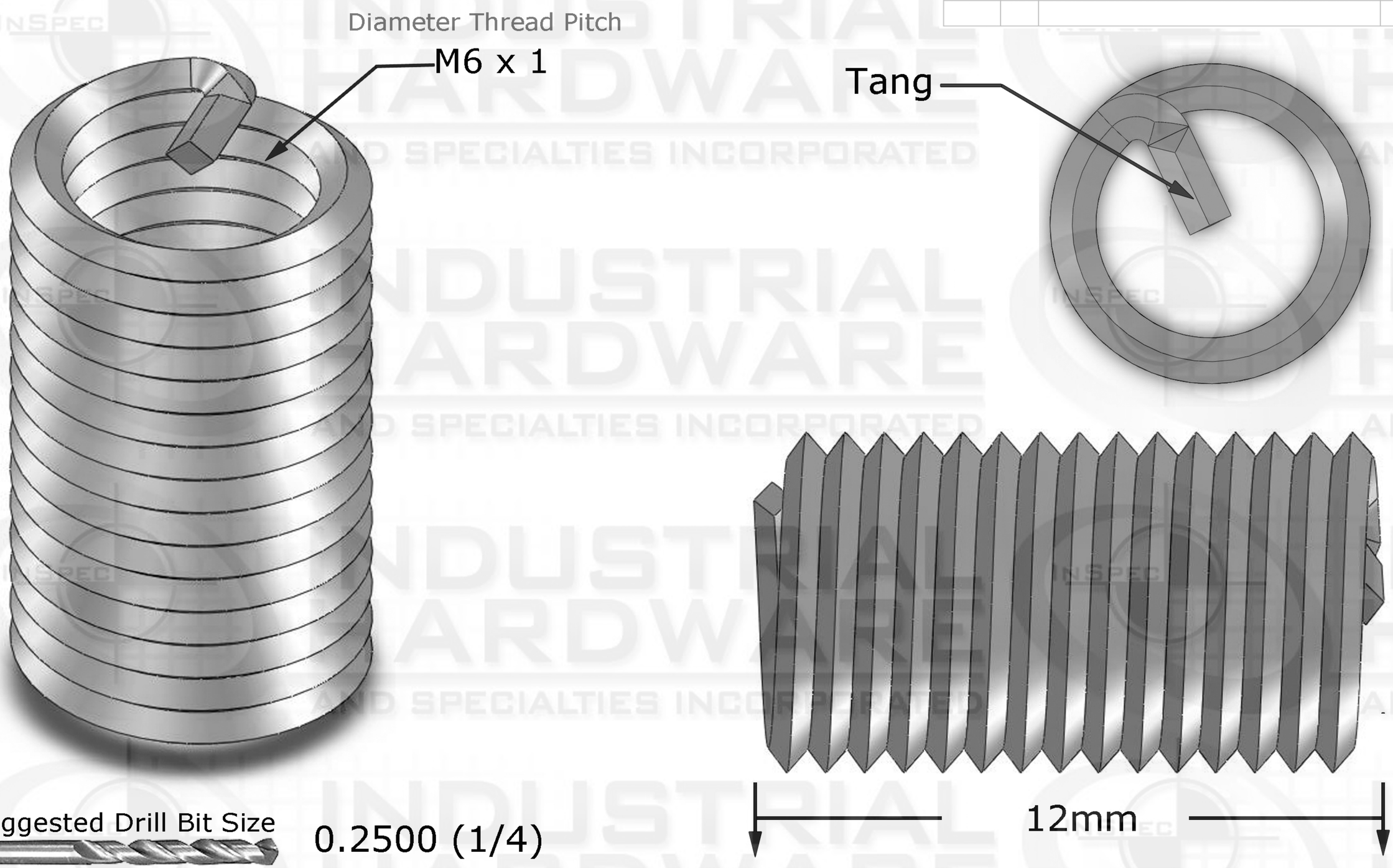


Suggested Drill Bit Size 0.2500 (1/4)


**PROPRIETARY AND CONFIDENTIAL**

THIS DRAWING AND IT'S CONTENT IS THE SOLE PROPERTY OF INDUSTRIAL HARDWARE & SPECIALTIES,INC.. ANY REPRODUCTION IN PART OR AS A WHOLE WITHOUT THE WRITTEN PERMISSION OF INDUSTRIAL HARDWARE & SPECIALTIES,INC. IS STRICTLY PROHIBITED.


| NEXT ASSY | USED ON |
|---|---|
| APPLICATION | |

AEROSPACE MA3329-206

TH. STANDARD: ISO Metric
ACRONYM: ISO
ROTATION: Right-Hand

MATERIAL FINISH: Stainless Steel 18-8

PART NUMBER: 35L7C-C8M2-B60F20-34

DO NOT SCALE DRAWING

| | NAME | DATE |
|---|---|---|
| DRAWN | | |
| CHECKED | | |
| ENG APPR. | | |
| MFG APPR. | | |
| Q.A. | | |

COMMENTS:


INDUSTRIAL HARDWARE AND SPECIALTIES INCORPORATED

**17-B KENTUCKY AVENUE**
**PATERSON, NEW JERSEY 07503**
**TEL: 973-684-4010 FAX: 973-684-3095**
**email: TechSupport@industrialhardware.com**
**www.industrialhardware.com**


| SIZE | DWG. NO. | REV. |
|---|---|---|
| A | | |

SCALE:1:8 WEIGHT: 0.21 SHEET 1 OF 1