ZONE	REV.	REVISIONS DESCRIPTION	DATE	APPROVED

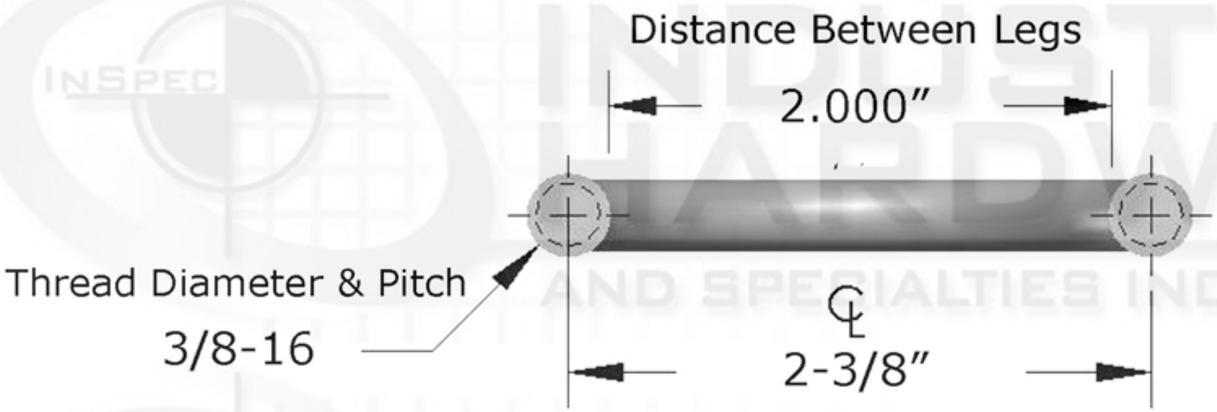

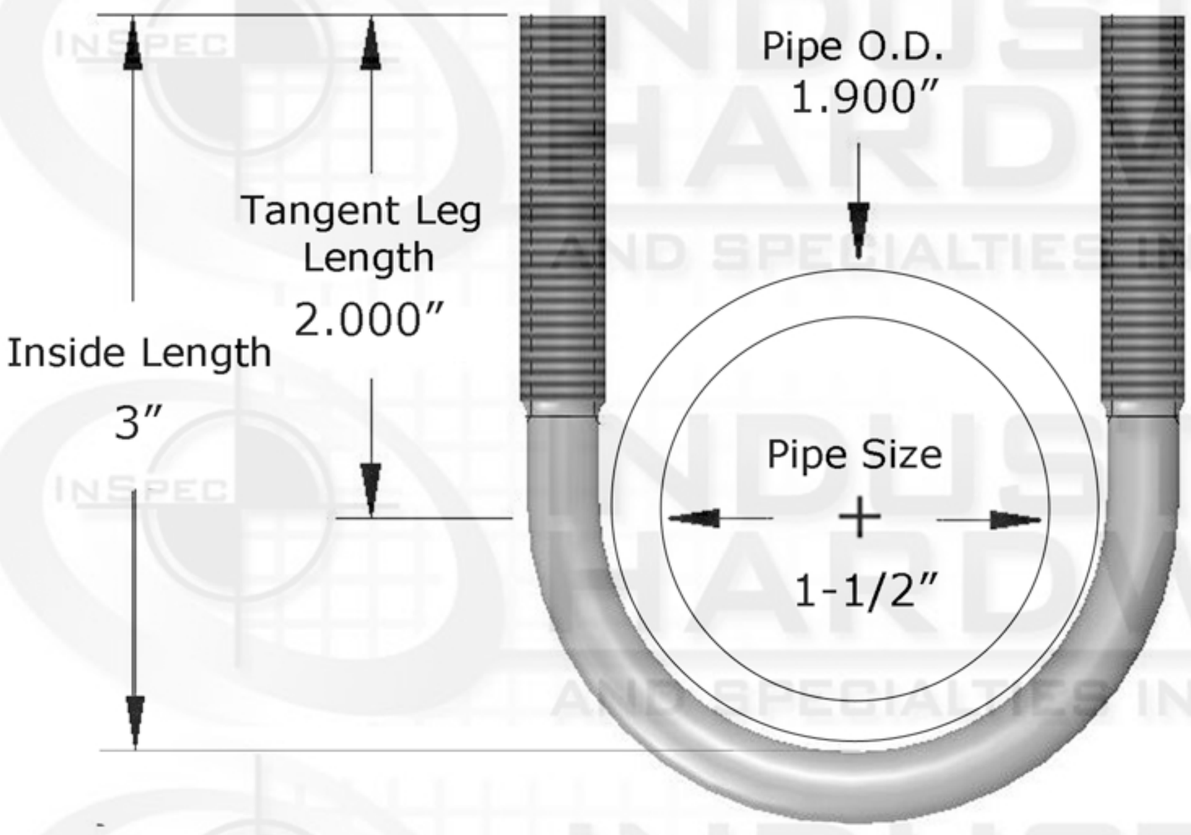

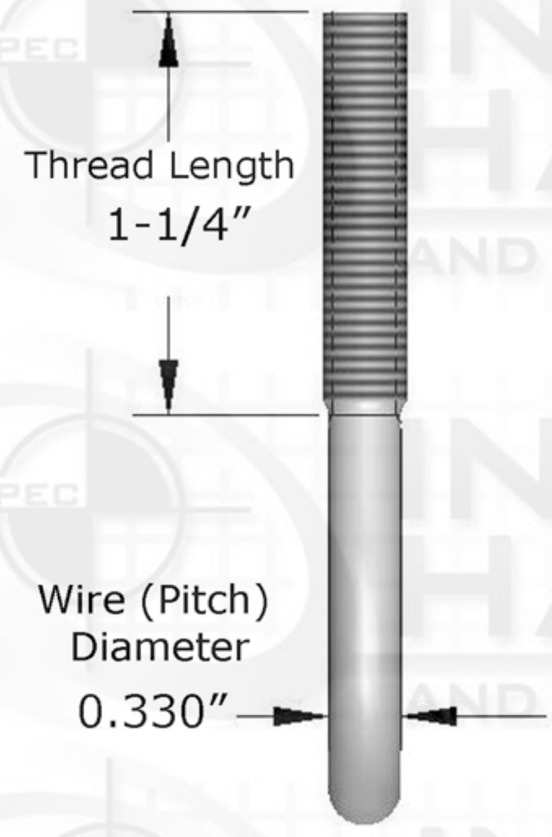

PROPRIETARY AND CONFIDENTIAL

THIS DRAWING AND IT'S CONTENT IS THE SOLE PROPERTY OF INDUSTRIAL HARDWARE & SPECIALTIES,INC.. ANY REPRODUCTION IN PART OR AS A WHOLE WITHOUT THE WRITTEN PERMISSION OF INDUSTRIAL HARDWARE & SPECIALTIES,INC. IS STRICTLY PROHIBITED.

DIMENSIONS ARE IN INCHES
TOLERANCES:
FRACTIONAL ± 1/64"
ANGULAR: MACH ± 1° BEND ± 1°
TWO PLACE DECIMAL ±.01"
THREE PLACE DECIMAL ±.005"
CONCENTRICITY T.I.R. = .005"

MATERIAL FINISH
Stainless Steel Type 316

PART NUMBER
78A-UBH37-0150-316

NEXT ASSY | USED ON

APPLICATION | DO NOT SCALE DRAWING

	NAME	DATE
DRAWN		
CHECKED		
ENG APPR.		
MFG APPR.		
Q.A.		

COMMENTS:

INDUSTRIAL HARDWARE AND SPECIALTIES INCORPORATED
17-B KENTUCKY AVENUE
PATERSON, NEW JERSEY 07503
TEL: 973-684-4010 FAX: 973-684-3095
email: TechSupport@industrialhardware.com
www.industrialhardware.com

SIZE A | DWG. NO. | REV.

SCALE:1:8 | WEIGHT: 0.2 | SHEET 1 OF 1